Qualify Report

Title: HOUSING REPORT
Date Inspected: 9/8/2009
Date Generated: 9/9/2009, 10:41 am

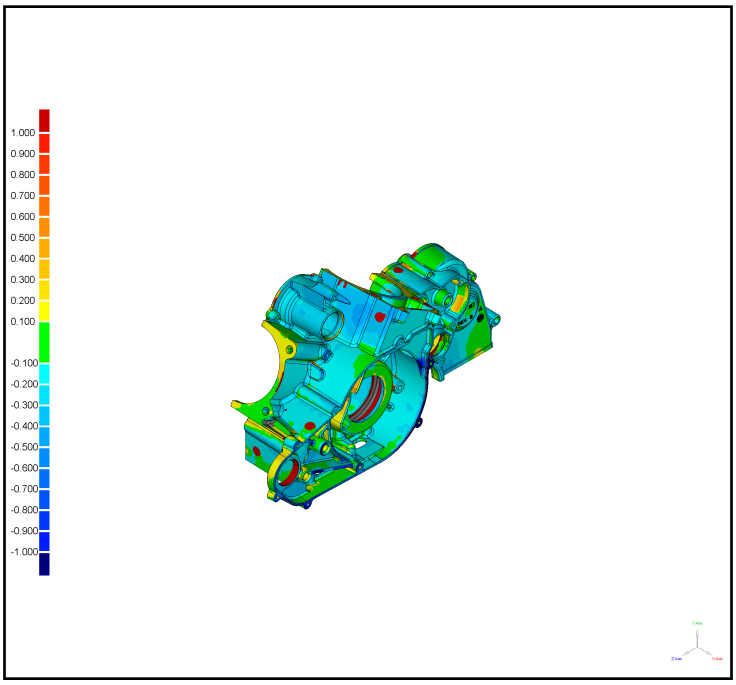

Client: ANYONE
Part: 155-8
Test: Merged Points 1

3D Comparison Results

Reference Model	155-8
Test Model	Merged Points 1
No. of Data Points	2329473
# Outliers	2319

Tolerance Type	3D Deviation
Units	mm
Max. Critical	1.000
Max. Nominal	0.100
Min. Nominal	-0.100
Min. Critical	-1.000

Deviation	mm
Max. Upper Dev.	19.186
Max. Lower Dev.	-15.275
Average Deviation	0.707 /-0.179
Standard Deviation	1.104

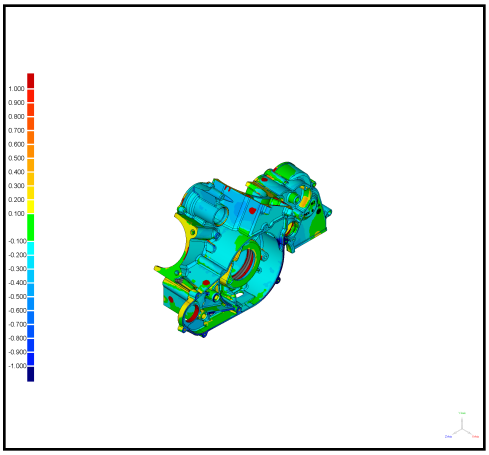

Percentage Deviations

>=Min	<Max	# Points	%
-1.000	-0.900	767	0.033
-0.900	-0.800	1221	0.052
-0.800	-0.700	1112	0.048
-0.700	-0.600	2328	0.100
-0.600	-0.500	10127	0.435
-0.500	-0.400	28156	1.209
-0.400	-0.300	85685	3.678
-0.300	-0.200	265167	11.383
-0.200	-0.100	465894	20.000
-0.100	0.100	1267159	54.397
0.100	0.200	95459	4.098
0.200	0.300	24824	1.066
0.300	0.400	11066	0.475
0.400	0.500	4706	0.202
0.500	0.600	1925	0.083
0.600	0.700	1244	0.053
0.700	0.800	1139	0.049
0.800	0.900	936	0.040
0.900	1.000	860	0.037

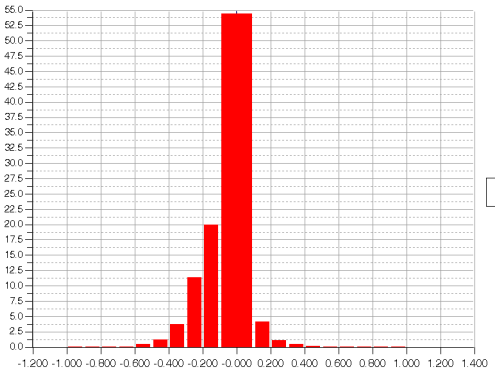

Out of Upper Critical	53295	2.288
Out of Lower Critical	6403	0.275

Standard Deviations

Distribution (+/-)	# Points	%
-6 * Std. Dev.	1402	0.060
-5 * Std. Dev.	573	0.025
-4 * Std. Dev.	837	0.036
-3 * Std. Dev.	914	0.039
-2 * Std. Dev.	2307	0.099
-1 * Std. Dev.	2016748	86.575
1 * Std. Dev.	254402	10.921
2 * Std. Dev.	12588	0.540
3 * Std. Dev.	6059	0.260
4 * Std. Dev.	5236	0.225
5 * Std. Dev.	12409	0.533
6 * Std. Dev.	15998	0.687

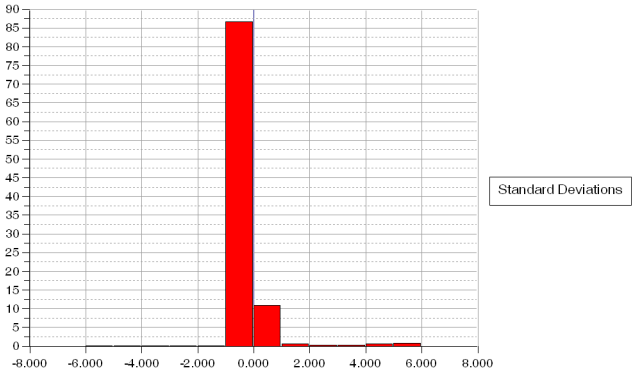

Predefined: Front

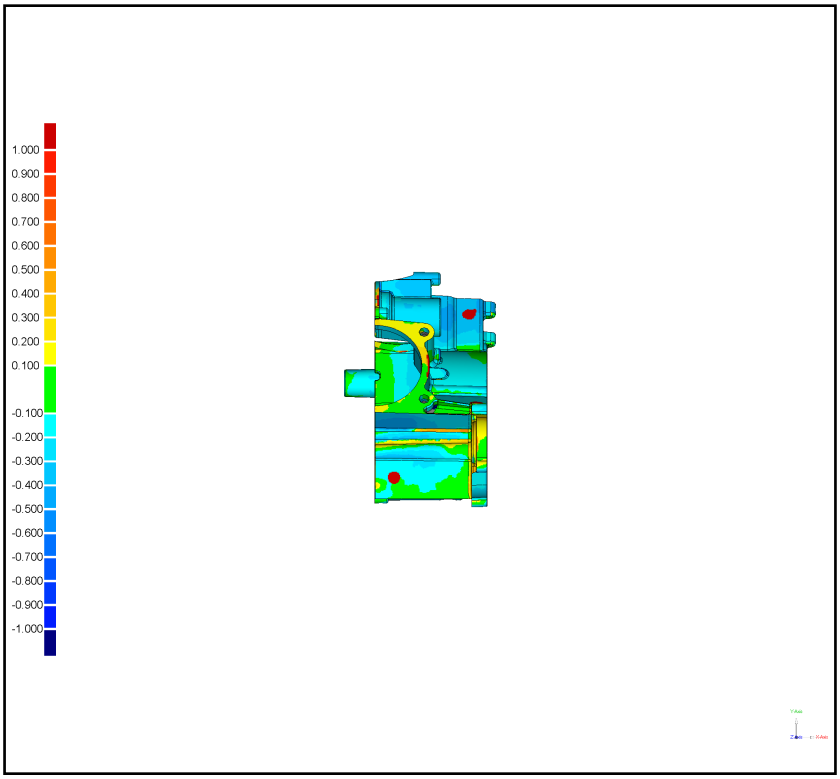

Predefined: Back

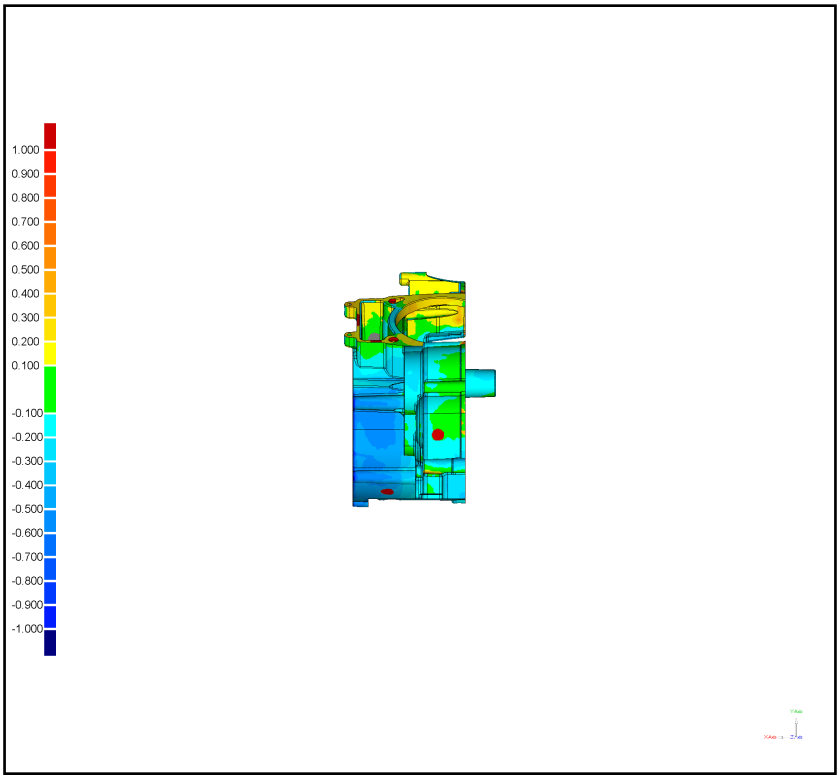

Predefined: Left

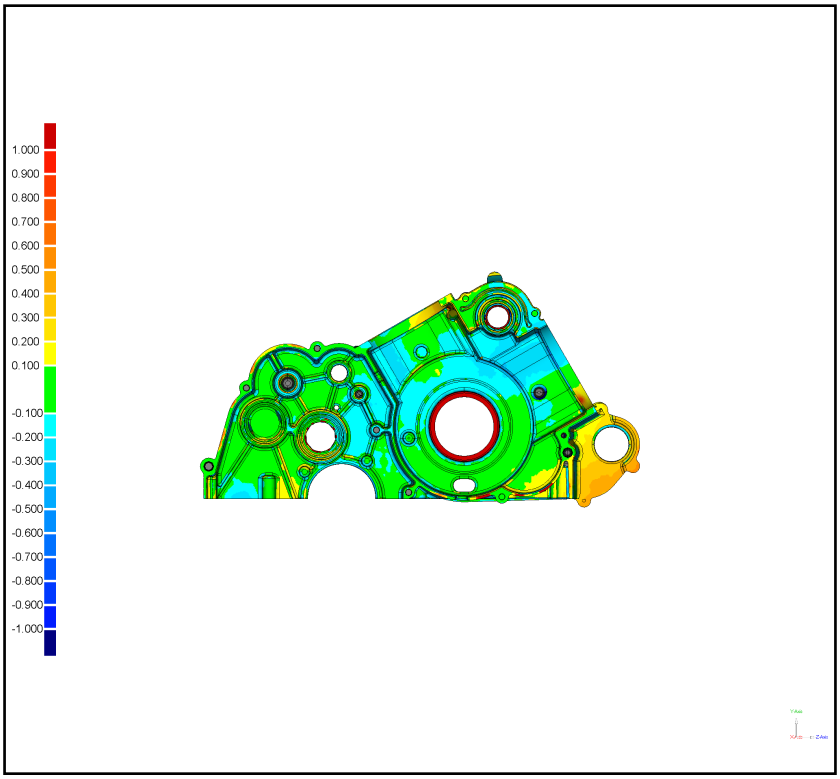

Predefined: Right

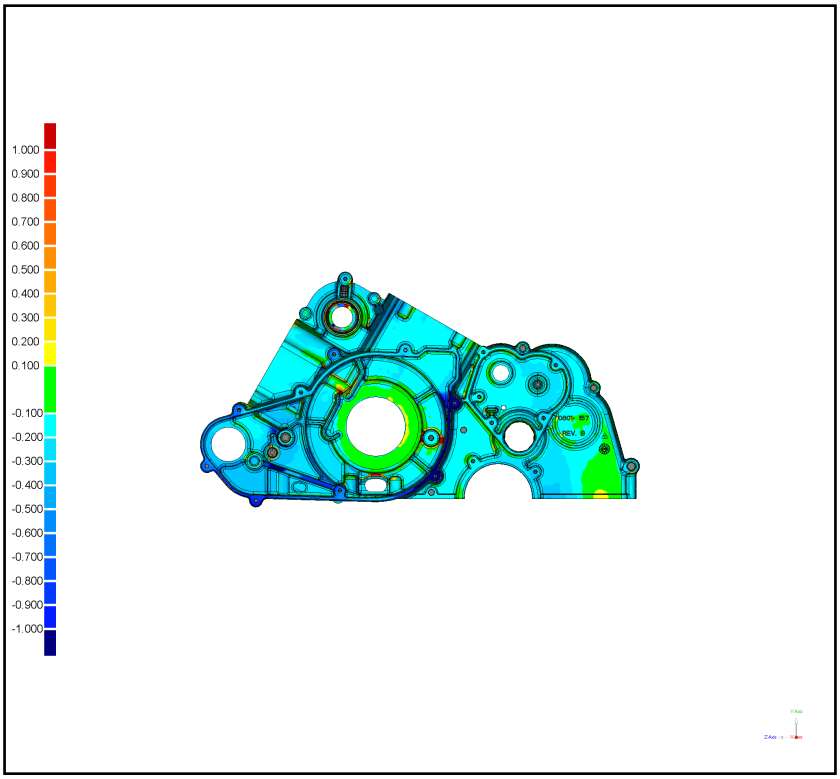

Predefined: Top

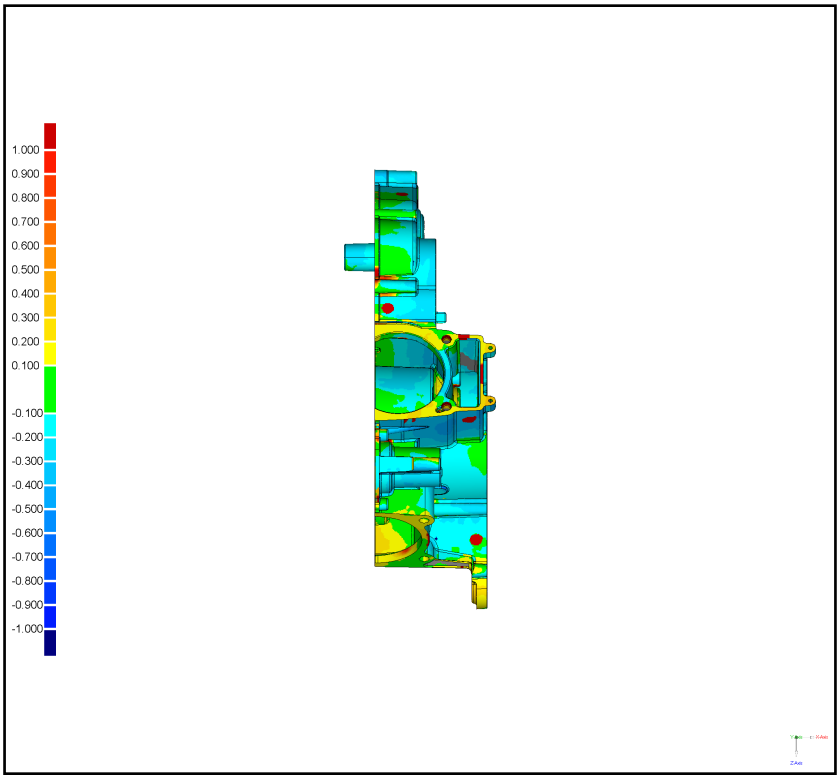

Predefined: Bottom

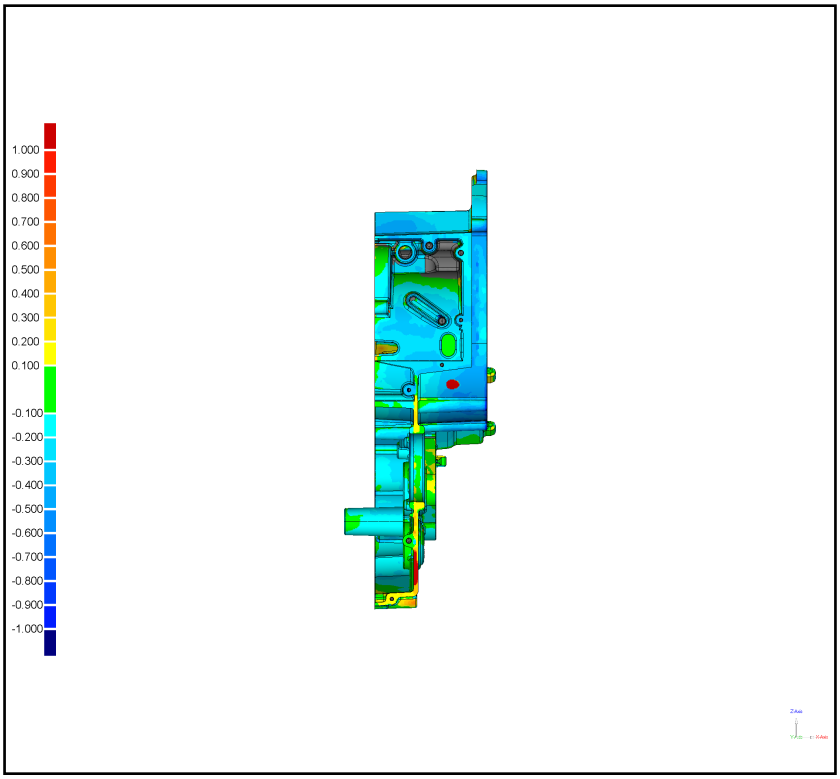

Predefined: Isometric

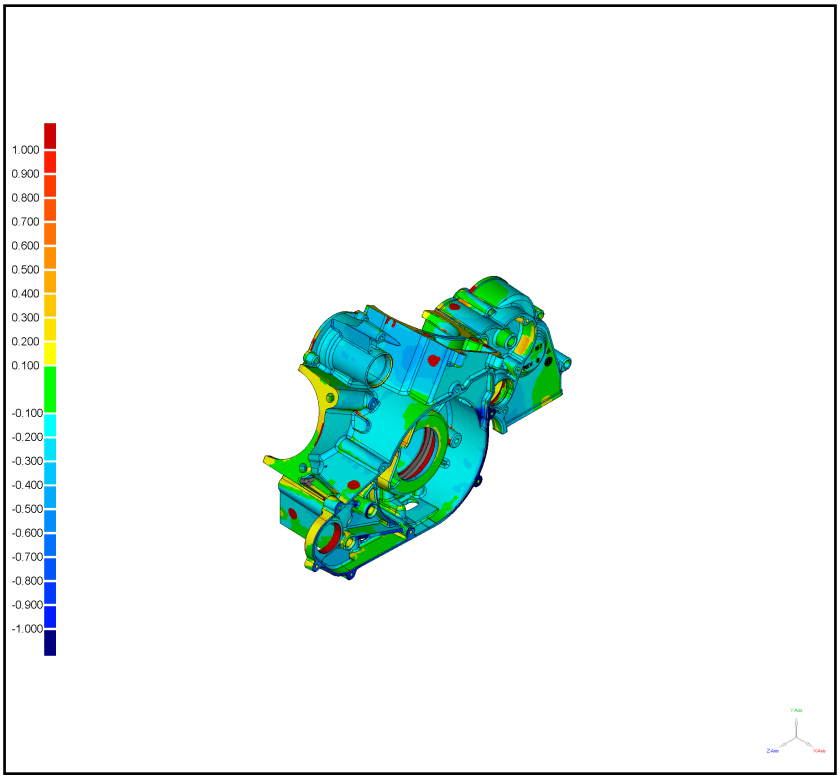

Annotated: Annotation View 1

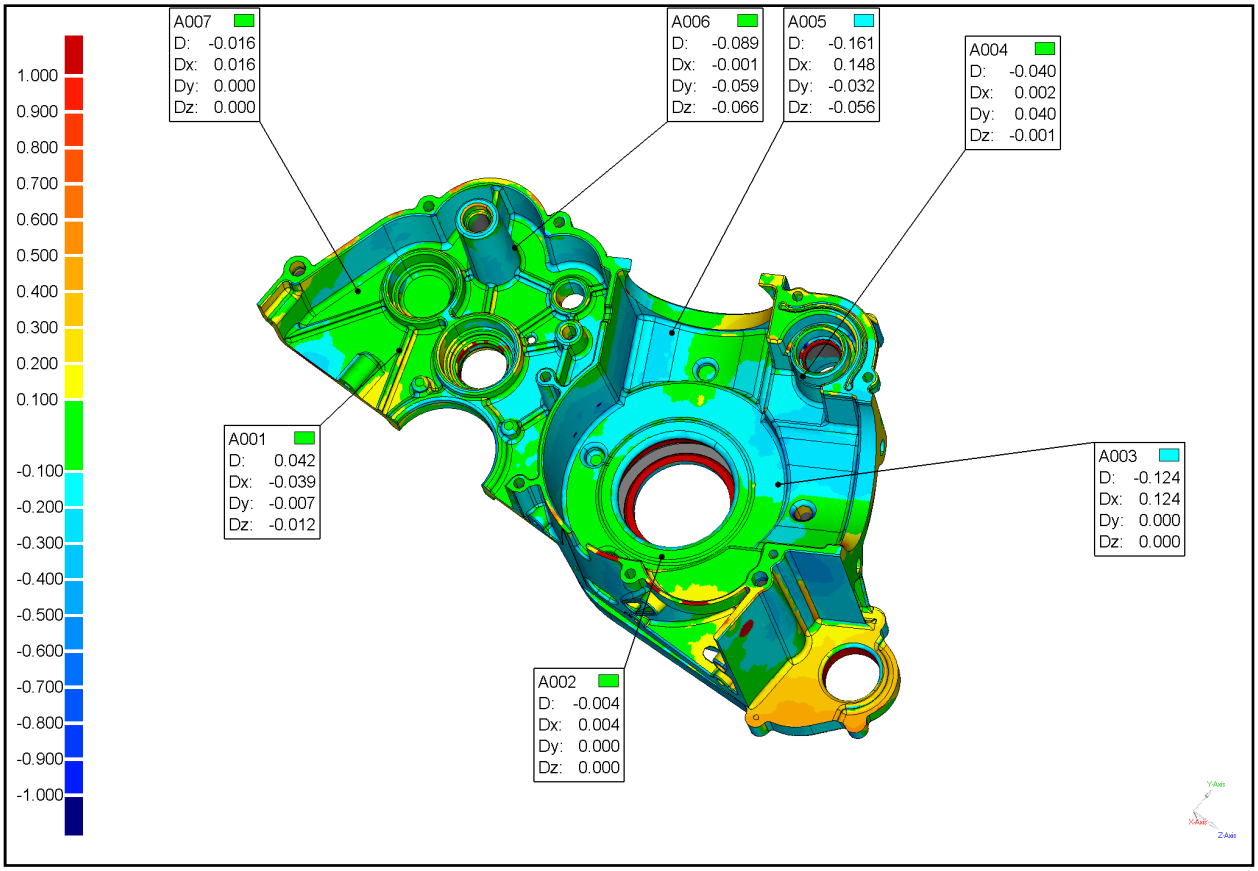

Units:mm

CSYS: World CSYS

Name	Dev	Status	Upper Tol.	Lower Tol.	Ref X	Ref Y	Ref Z	Dev Radius	Dev X	Dev Y	Dev Z	Test X	Test Y	Test Z
A001	0.042	PASS	0.250	-0.250	42.286	-38.774	-208.681	1.000	-0.039	-0.007	-0.012	42.246	-38.780	-208.693
A002	-0.004	PASS	0.250	-0.250	63.000	-42.056	24.218	1.000	0.004	0.000	0.000	63.004	-42.056	24.218
A003	-0.124	PASS	0.250	-0.250	64.500	45.246	52.935	1.000	0.124	0.000	0.000	64.624	45.246	52.935
A004	-0.040	PASS	0.250	-0.250	7.179	102.192	39.168	1.000	0.002	0.040	-0.001	7.181	102.232	39.166
A005	-0.161	PASS	0.250	-0.250	73.748	88.267	-81.198	1.000	0.148	-0.032	-0.056	73.896	88.234	-81.255
A006	-0.089	PASS	0.250	-0.250	19.902	59.624	-184.960	1.000	-0.001	-0.059	-0.066	19.901	59.565	-185.027
A007	-0.016	PASS	0.250	-0.250	42.500	-22.800	-259.662	1.000	0.016	0.000	0.000	42.516	-22.800	-259.662

Annotated: Annotation View 2

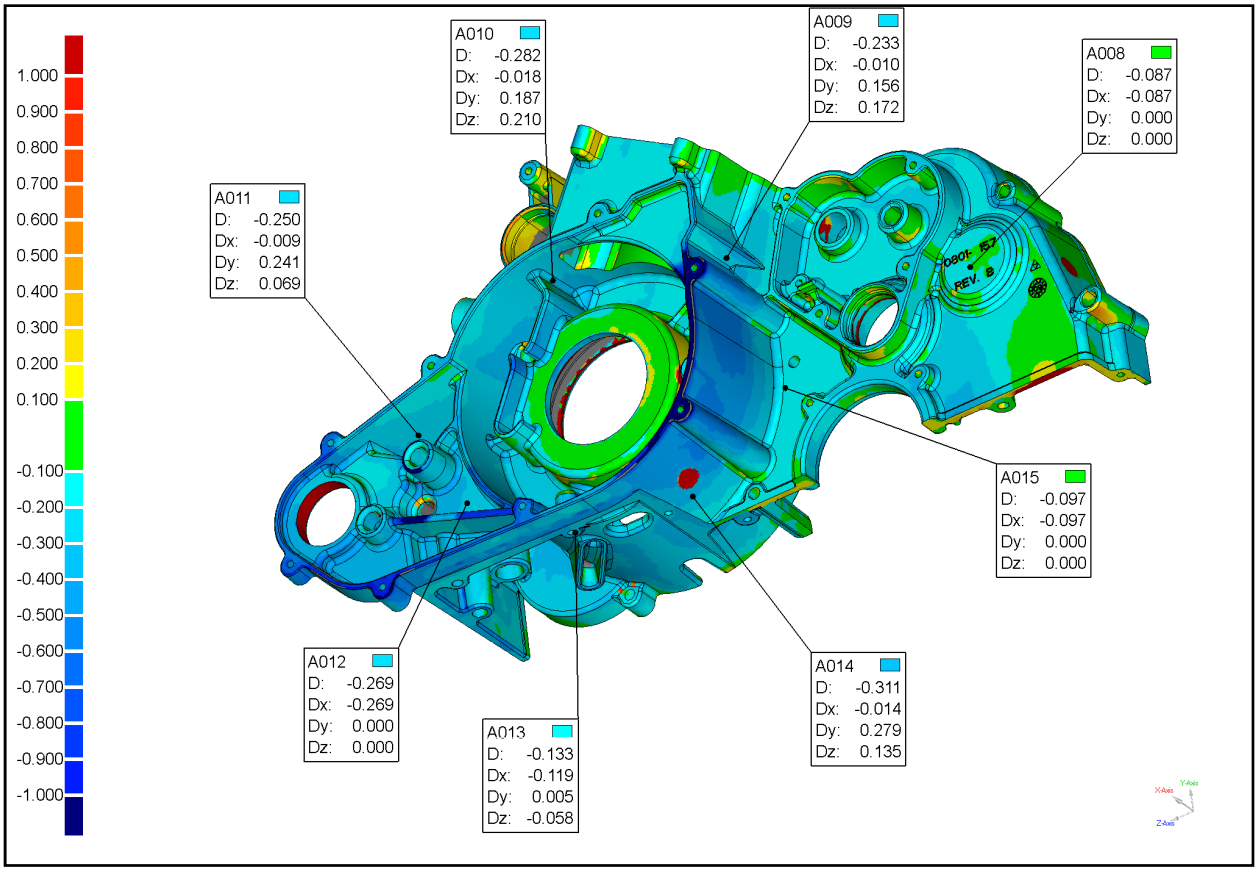

Units:mm

CSYS: World CSYS

Name	Dev	Status	Upper Tol.	Lower Tol.	Ref X	Ref Y	Ref Z	Dev Radius	Dev X	Dev Y	Dev Z	Test X	Test Y	Test Z
A008	-0.087	PASS	0.250	-0.250	53.500	0.787	-219.295	1.000	-0.087	0.000	0.000	53.413	0.787	-219.295
A009	-0.233	PASS	0.250	-0.250	89.603	47.205	-89.543	1.000	-0.010	0.156	0.172	89.593	47.362	-89.371
A010	-0.282	FAIL	0.250	-0.250	96.275	75.697	15.960	1.000	-0.018	0.187	0.210	96.257	75.884	16.170
A011	-0.250	FAIL	0.250	-0.250	91.653	21.442	115.306	1.000	-0.009	0.241	0.069	91.644	21.682	115.375
A012	-0.269	FAIL	0.250	-0.250	98.500	-37.152	87.875	1.000	-0.269	0.000	0.000	98.231	-37.152	87.875
A013	-0.133	PASS	0.250	-0.250	92.916	-80.184	26.841	1.000	-0.119	0.005	-0.058	92.796	-80.180	26.783
A014	-0.311	FAIL	0.250	-0.250	73.365	-76.611	-38.147	1.000	-0.014	0.279	0.135	73.351	-76.331	-38.012
A015	-0.097	PASS	0.250	-0.250	46.000	-17.421	-90.191	1.000	-0.097	0.000	0.000	45.903	-17.421	-90.191

Annotated: Annotation View 3

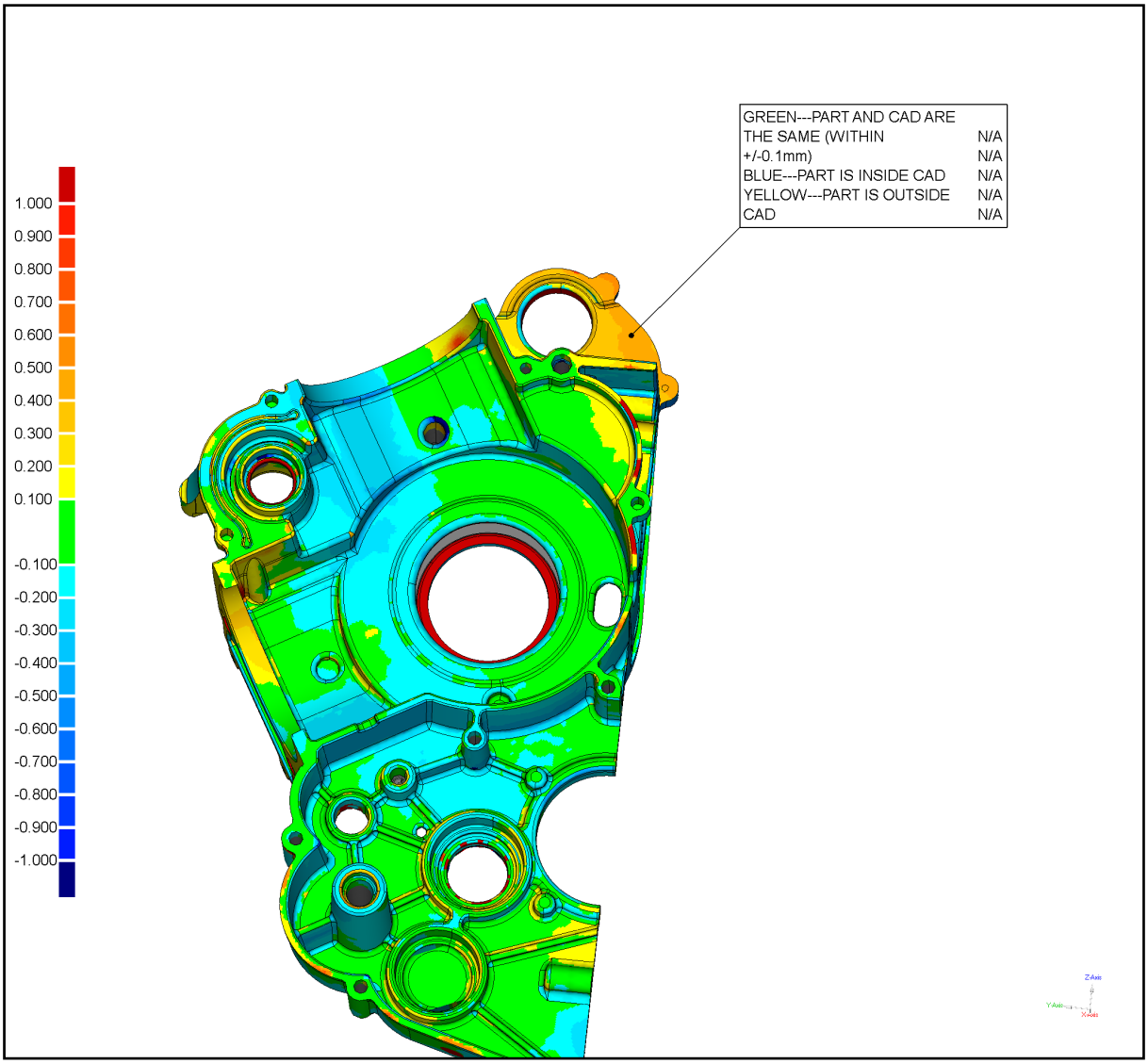

Annotated: All

Units:mm

Name	Dev	Status	Upper Tol.	Lower Tol.	Ref X	Ref Y	Ref Z	Dev Radius	Dev X	Dev Y	Dev Z	Test X	Test Y	Test Z
A001	0.042	PASS	0.250	-0.250	42.286	-38.774	-208.681	1.000	-0.039	-0.007	-0.012	42.246	-38.780	-208.693
A002	-0.004	PASS	0.250	-0.250	63.000	-42.056	24.218	1.000	0.004	0.000	0.000	63.004	-42.056	24.218
A003	-0.124	PASS	0.250	-0.250	64.500	45.246	52.935	1.000	0.124	0.000	0.000	64.624	45.246	52.935
A004	-0.040	PASS	0.250	-0.250	7.179	102.192	39.168	1.000	0.002	0.040	-0.001	7.181	102.232	39.166
A005	-0.161	PASS	0.250	-0.250	73.748	88.267	-81.198	1.000	0.148	-0.032	-0.056	73.896	88.234	-81.255
A006	-0.089	PASS	0.250	-0.250	19.902	59.624	-184.960	1.000	-0.001	-0.059	-0.066	19.901	59.565	-185.027
A007	-0.016	PASS	0.250	-0.250	42.500	-22.800	-259.662	1.000	0.016	0.000	0.000	42.516	-22.800	-259.662
A008	-0.087	PASS	0.250	-0.250	53.500	0.787	-219.295	1.000	-0.087	0.000	0.000	53.413	0.787	-219.295
A009	-0.233	PASS	0.250	-0.250	89.603	47.205	-89.543	1.000	-0.010	0.156	0.172	89.593	47.362	-89.371
A010	-0.282	FAIL	0.250	-0.250	96.275	75.697	15.960	1.000	-0.018	0.187	0.210	96.257	75.884	16.170
A011	-0.250	FAIL	0.250	-0.250	91.653	21.442	115.306	1.000	-0.009	0.241	0.069	91.644	21.682	115.375
A012	-0.269	FAIL	0.250	-0.250	98.500	-37.152	87.875	1.000	-0.269	0.000	0.000	98.231	-37.152	87.875
A013	-0.133	PASS	0.250	-0.250	92.916	-80.184	26.841	1.000	-0.119	0.005	-0.058	92.796	-80.180	26.783
A014	-0.311	FAIL	0.250	-0.250	73.365	-76.611	-38.147	1.000	-0.014	0.279	0.135	73.351	-76.331	-38.012
A015	-0.097	PASS	0.250	-0.250	46.000	-17.421	-90.191	1.000	-0.097	0.000	0.000	45.903	-17.421	-90.191

Compare 2D: Comparison 1

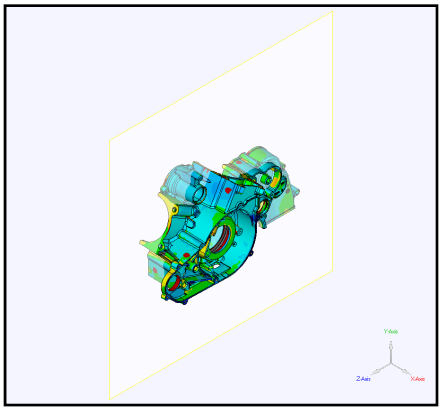

X = 49.400 mm

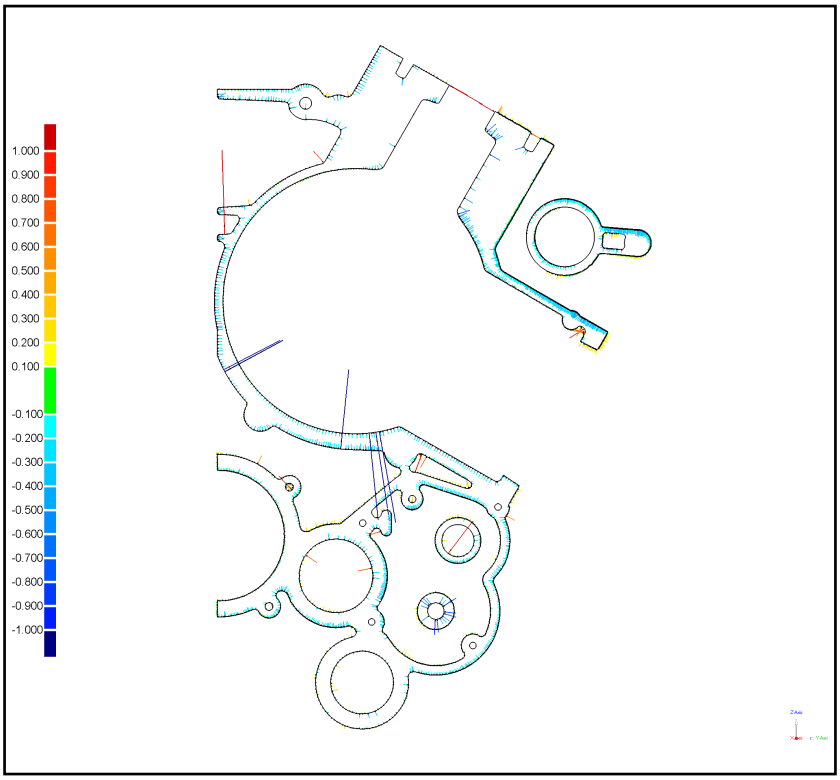

Method: Planar Deviation

Whisker Scale: 10.000000

2D Comparison Results

CSYS: World CSYS

Reference Model	155-8
Test Model	Merged Points 1

Name	Comparison 1
Location	X = 49.400 mm
No. of Data Points	24549

Units	mm
Max. Critical	1.000
Max. Nominal	0.100
Min. Nominal	-0.100
Min. Critical	-1.000

Deviation	mm
Max Dev +	4.896
Max Dev -	-5.382
Standard Deviation	0.244

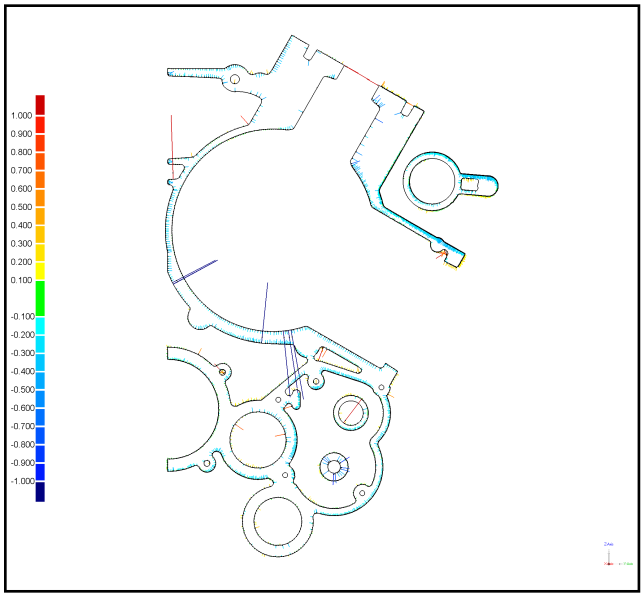

Percentage Deviations

>=Min	<Max	# Points	%
-1.000	-0.900	2	0.008
-0.900	-0.800	10	0.041
-0.800	-0.700	32	0.130
-0.700	-0.600	39	0.159
-0.600	-0.500	62	0.253
-0.500	-0.400	118	0.481
-0.400	-0.300	1082	4.408
-0.300	-0.200	4731	19.272
-0.200	-0.100	6289	25.618
-0.100	0.100	9925	40.429
0.100	0.200	1673	6.815
0.200	0.300	400	1.629
0.300	0.400	56	0.228
0.400	0.500	22	0.090
0.500	0.600	17	0.069
0.600	0.700	7	0.029
0.700	0.800	12	0.049
0.800	0.900	8	0.033
0.900	1.000	13	0.053

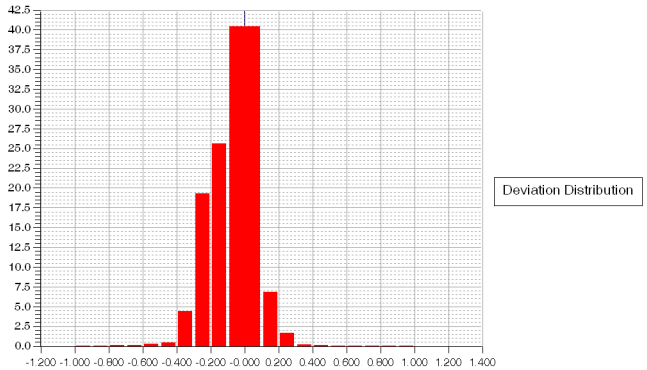

Out of Upper Critical +	15	0.061
Out of Lower Critical -	36	0.147

Standard Deviations

Distribution (+/-)	# Points	%
-6 * Std. Dev.	36	0.147
-5 * Std. Dev.	0	0.000
-4 * Std. Dev.	29	0.118
-3 * Std. Dev.	124	0.505
-2 * Std. Dev.	3241	13.202
-1 * Std. Dev.	14621	59.558
1 * Std. Dev.	6229	25.374
2 * Std. Dev.	194	0.790
3 * Std. Dev.	30	0.122
4 * Std. Dev.	28	0.114
5 * Std. Dev.	8	0.033
6 * Std. Dev.	9	0.037

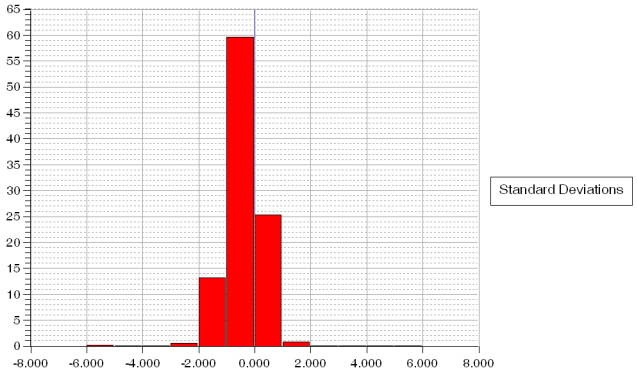

Dimension 2D: Section 1

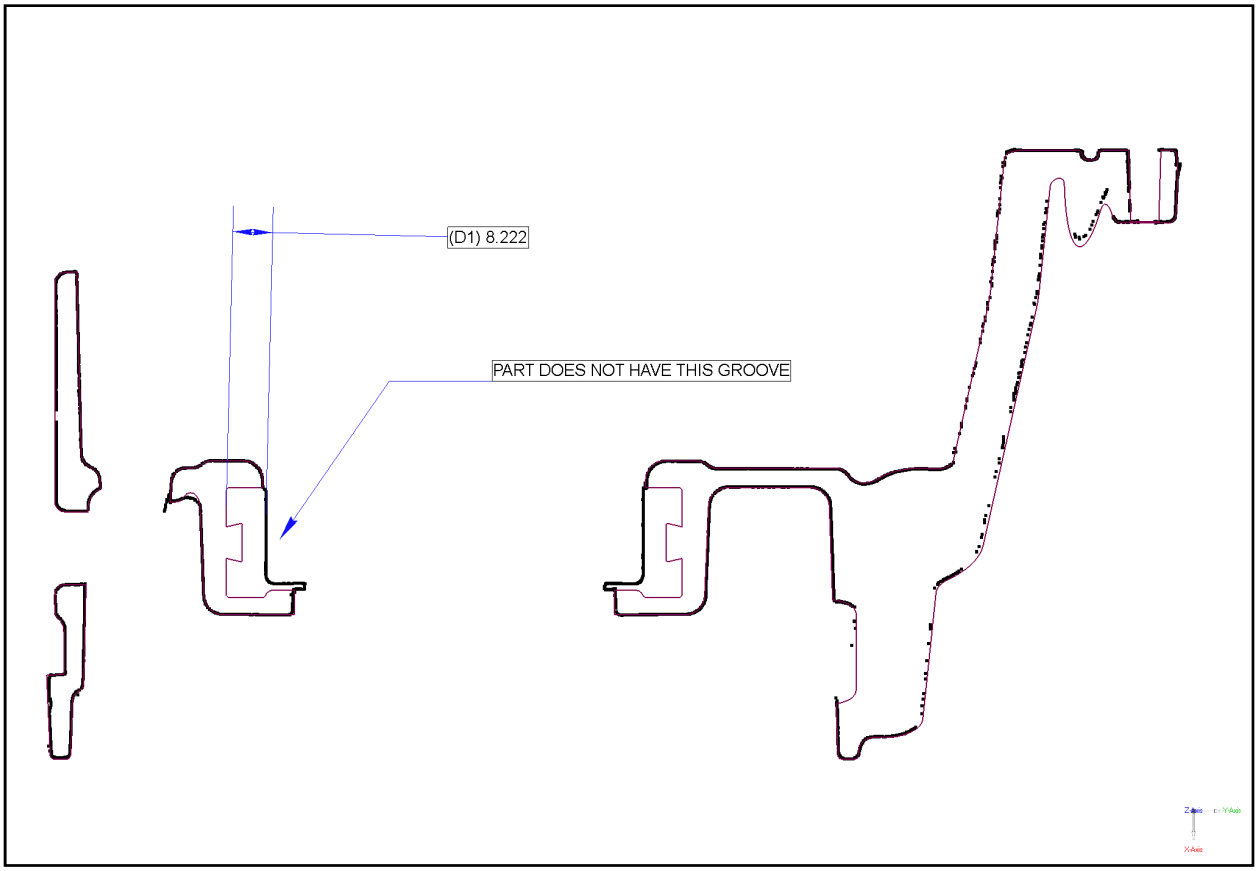

Units:mm

CSYS: World CSYS

Name	Measured	Nominal	Deviation	Status	Upper Tol.	Lower Tol.
D1	8.222	0.000	8.222	FAIL	1.000	-1.000

Dimension 2D: Section 2

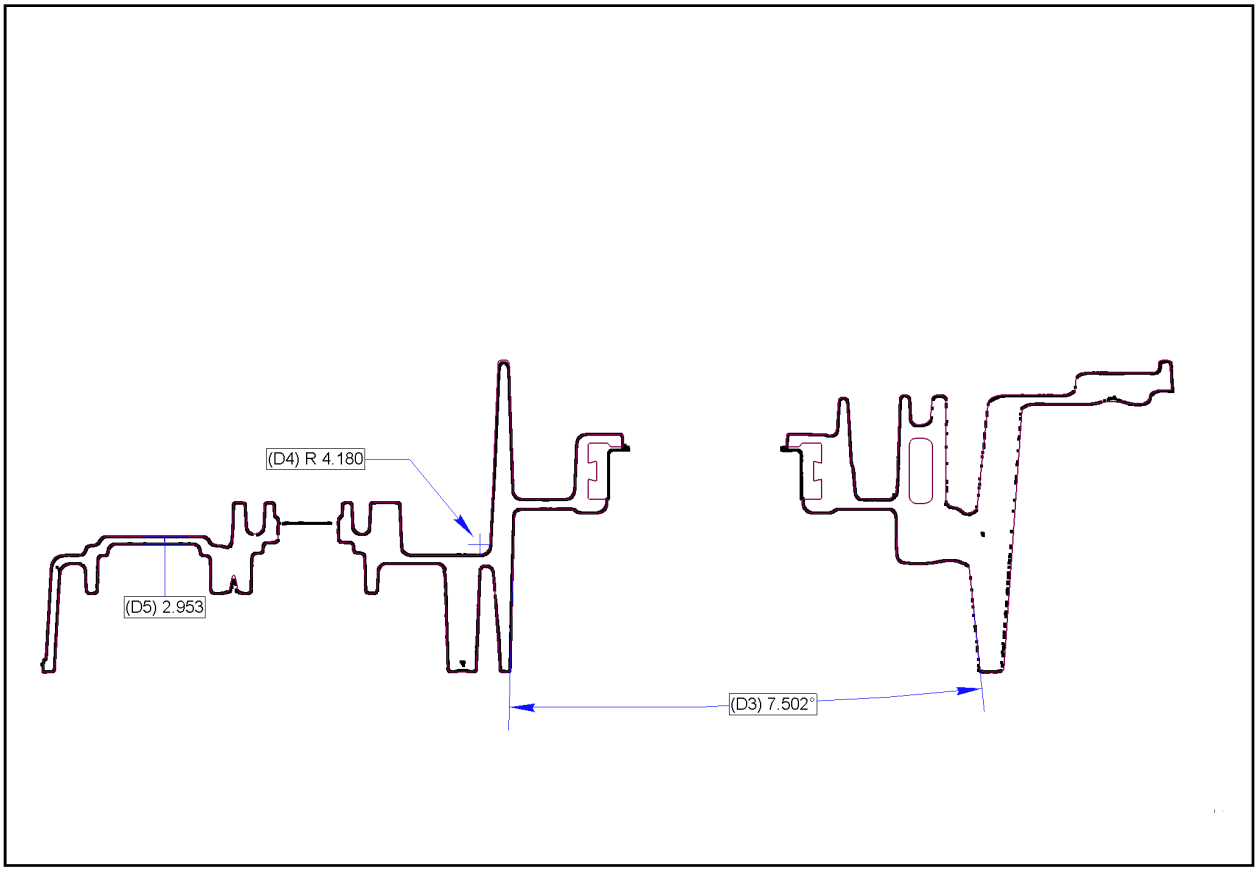

Units:mm

CSYS: World CSYS

Name	Measured	Nominal	Deviation	Status	Upper Tol.	Lower Tol.
D3	7.502	7.502	0.000	PASS	1.000	-1.000
D4	4.180	4.180	0.000	PASS	1.000	-1.000
D5	2.953	3.000	-0.047	PASS	1.000	-1.000

Dimension 2D: Section 3

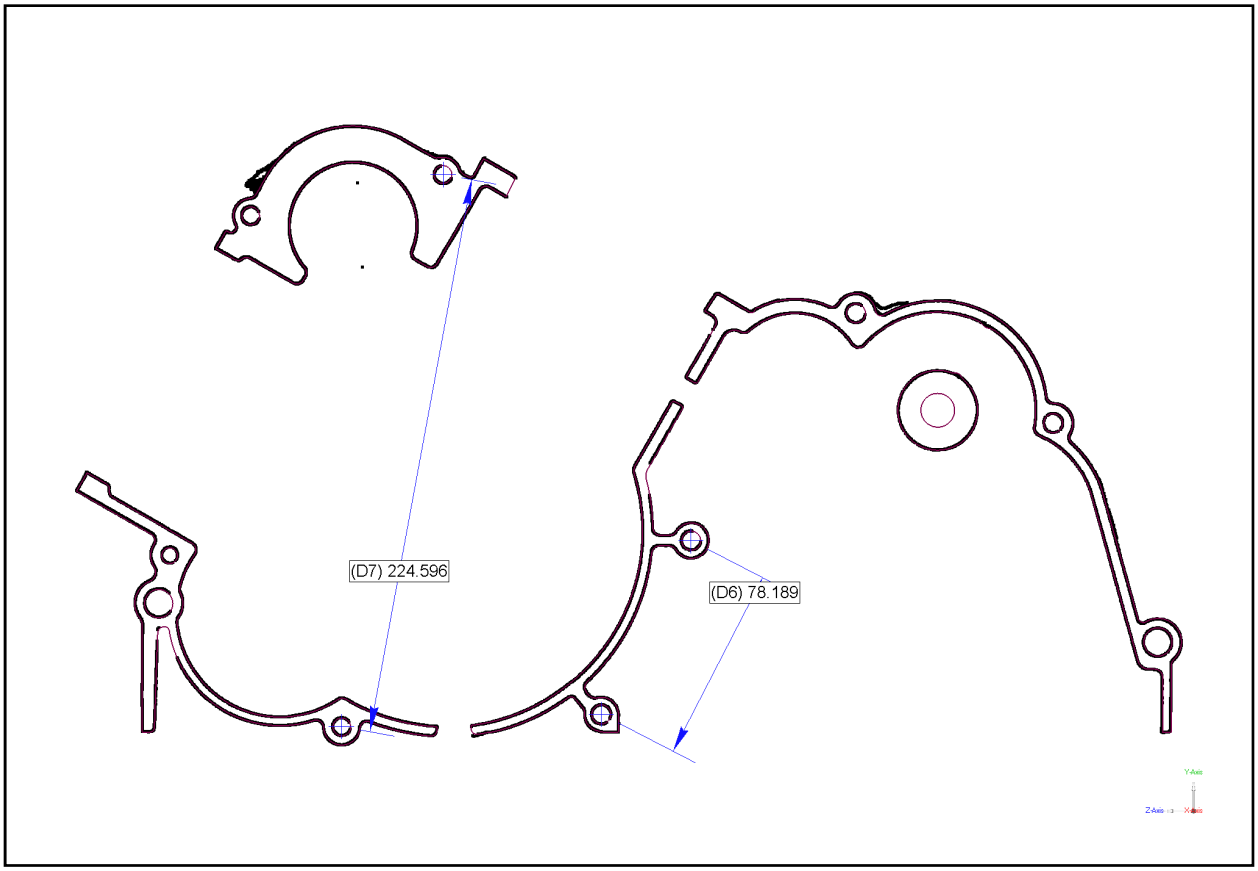

Units:mm

CSYS: World CSYS

Name	Measured	Nominal	Deviation	Status	Upper Tol.	Lower Tol.
D6	78.189	78.270	-0.082	PASS	1.000	-1.000
D7	224.596	224.680	-0.084	PASS	1.000	-1.000

Dimension 3D: Dim View 1

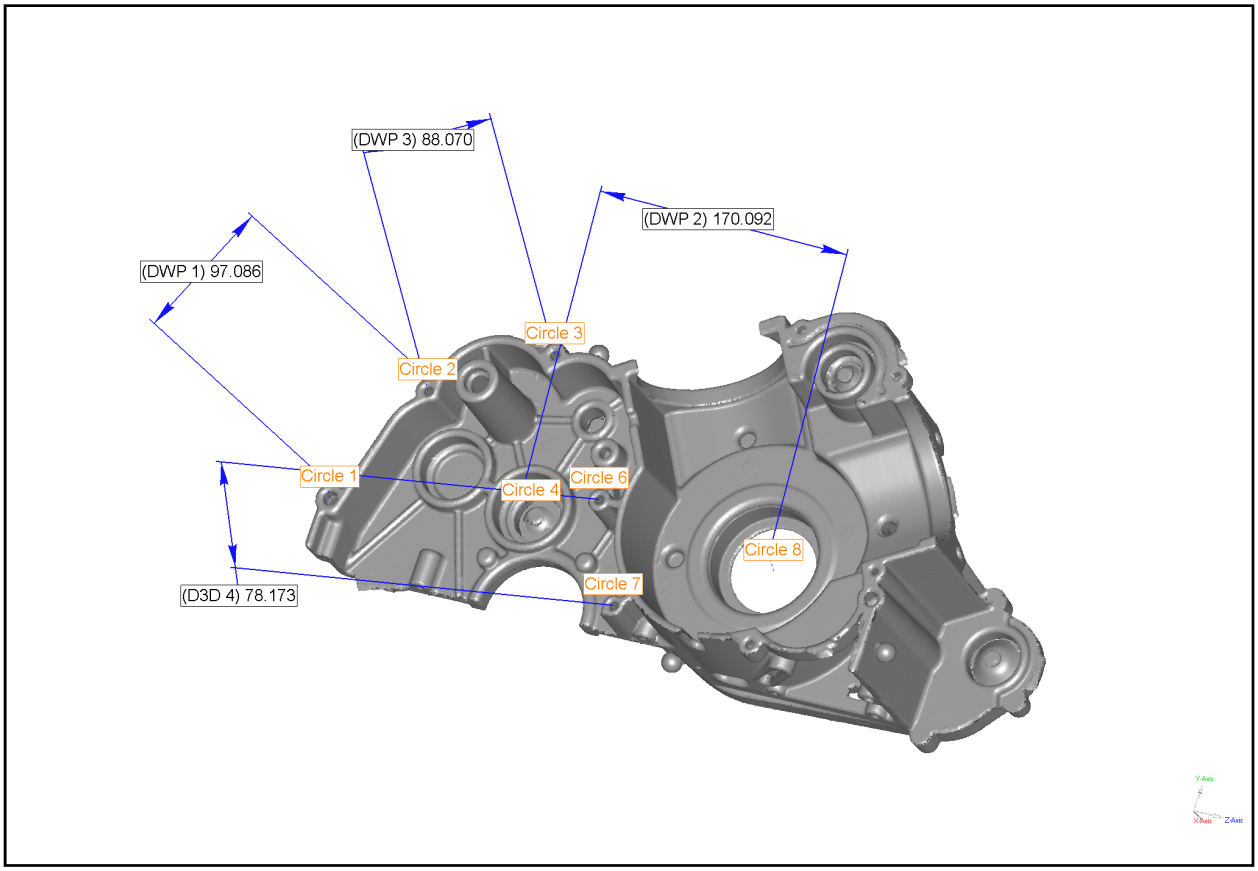

Units:mm

CSYS: World CSYS

Name	Measured	Nominal	Deviation	Status	Upper Tol.	Lower Tol.
D3D 4	78.173	78.270	-0.097			
DWP 1	97.086	97.038	0.048			
DWP 2	170.092	170.496	-0.404			
DWP 3	88.070	87.970	0.100			

GD&T Views: GD&T View 1

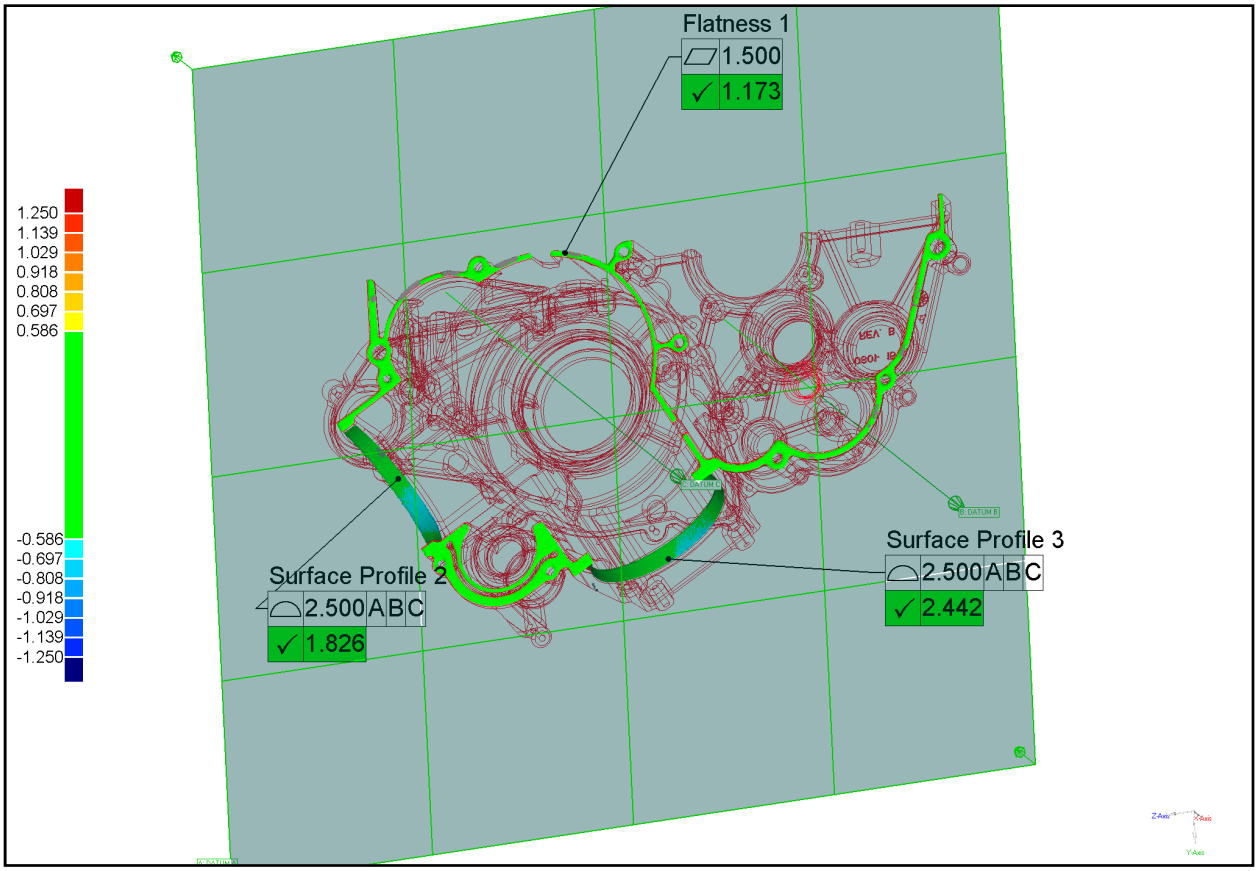

Units:mm

CSYS: World CSYS

Name	Tolerance	Measured	# Points	# Outliers	# Passed	# Failed	Min. Value	Max. Value	Bonus Tol.	Notes	Status
Flatness 1	1.500	1.173	32443	637	31806	0	-0.586	0.586	0.000		PASS
Surface Profile 2	2.500	1.826	8410	88	8322	0	-0.913	0.385	0.000		PASS
Surface Profile 3	2.500	2.442	12726	24	12702	0	-1.221	0.816	0.000		PASS

GD&T Views: GD&T View 2

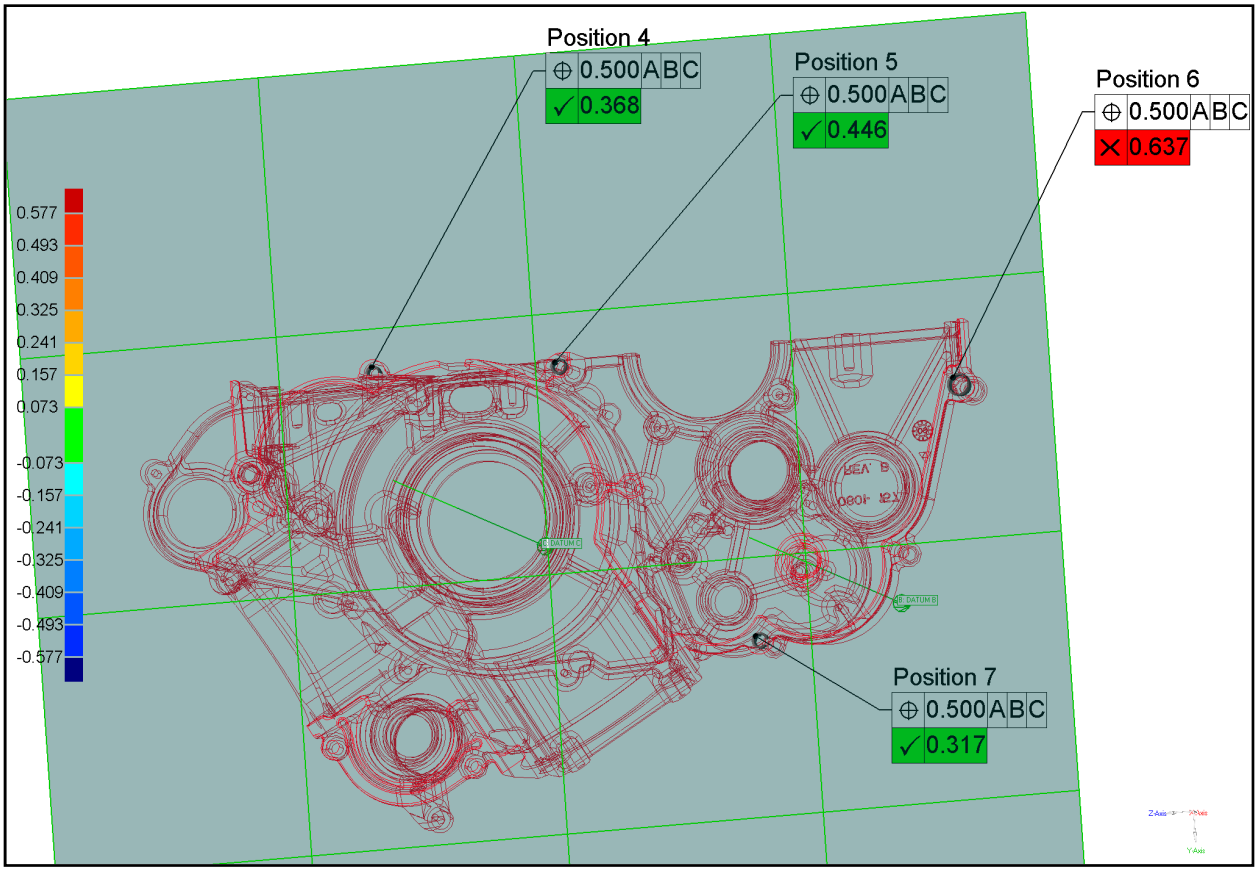

Units:mm

CSYS: World CSYS

Name	Tolerance	Measured	# Points	# Outliers	# Passed	# Failed	Min. Value	Max. Value	Bonus Tol.	Notes	Status
Position 4	0.500	0.368	197	N/A	N/A	N/A	N/A	N/A	0.000		PASS
Position 5	0.500	0.446	493	N/A	N/A	N/A	N/A	N/A	0.000		PASS
Position 6	0.500	0.637	876	N/A	N/A	N/A	N/A	N/A	0.000		FAIL
Position 7	0.500	0.317	455	N/A	N/A	N/A	N/A	N/A	0.000		PASS

GD&T Views: All

Units:mm

Name	Tolerance	Measured	# Points	# Outliers	# Passed	# Failed	Min. Value	Max. Value	Bonus Tol.	Notes	Status
Flatness 1	1.500	1.173	32443	637	31806	0	-0.586	0.586	0.000		PASS
Position 4	0.500	0.368	197	N/A	N/A	N/A	N/A	N/A	0.000		PASS
Position 5	0.500	0.446	493	N/A	N/A	N/A	N/A	N/A	0.000		PASS
Position 6	0.500	0.637	876	N/A	N/A	N/A	N/A	N/A	0.000		FAIL
Position 7	0.500	0.317	455	N/A	N/A	N/A	N/A	N/A	0.000		PASS
Surface Profile 2	2.500	1.826	8410	88	8322	0	-0.913	0.385	0.000		PASS
Surface Profile 3	2.500	2.442	12726	24	12702	0	-1.221	0.816	0.000		PASS

Wall Thickness: Wall Thickness View 1

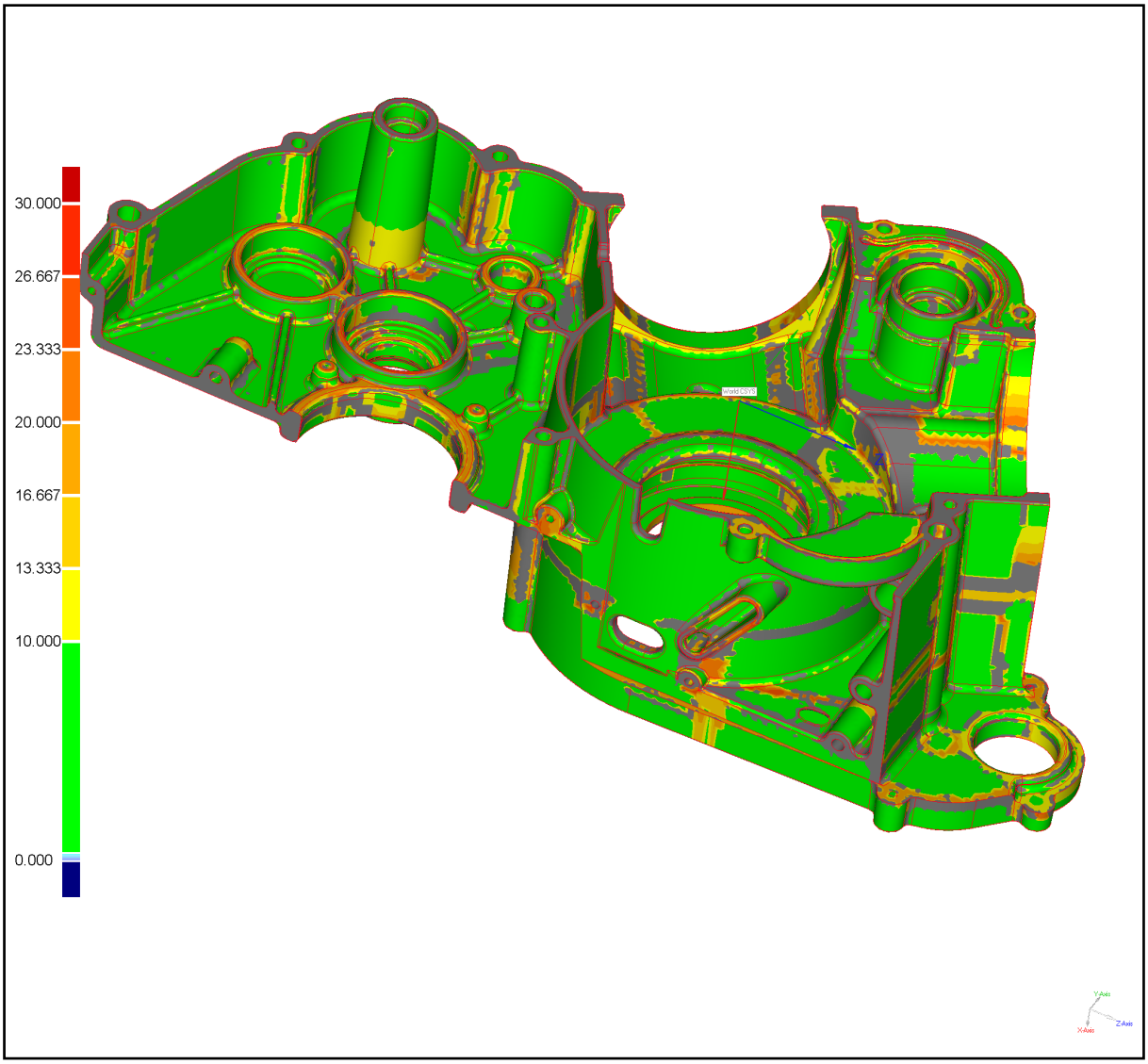

Display Type: Reference Thickness